ABRACON CORPORATION

A Worldwide Leading Supplier of Electronic Components

ABRACON Corporation
30332 Esperanza
Rancho Santa Margarita, California 92688
Ph 949.546.8000 Fx 949.546.8001
www.abracon.com

Tuning Fork Crystals and Oscillator

Introduction

- ***Scope***

  To introduce ABRACON's 32.768kHz product offerings

- ***Content***

  What is a Tuning Fork crystal? (At-cut crystal vs. Tuning Fork)
  Basic production flow
  Product offering
  Various packaging options
  Key points to consider for oscillator design
  Tuning Fork crystal based oscillator (ASHK series)
  Summary

This PTM is compiled to showcase ABRACON's 32.768kHz product offering. It outlines primary difference between AT cut and Tuning Fork crystals, basic production flow, product offering, key features, circuit design consideration, 32.768kHz ASHK oscillator & ABRACON's strengths

Temperature Stability Characteristic of an AT-Cut Crystal

$$\frac{\Delta f}{f} = A_1(t-t_o) + A_2(t-t_o)^2 + A_3(t-t_o)^3$$

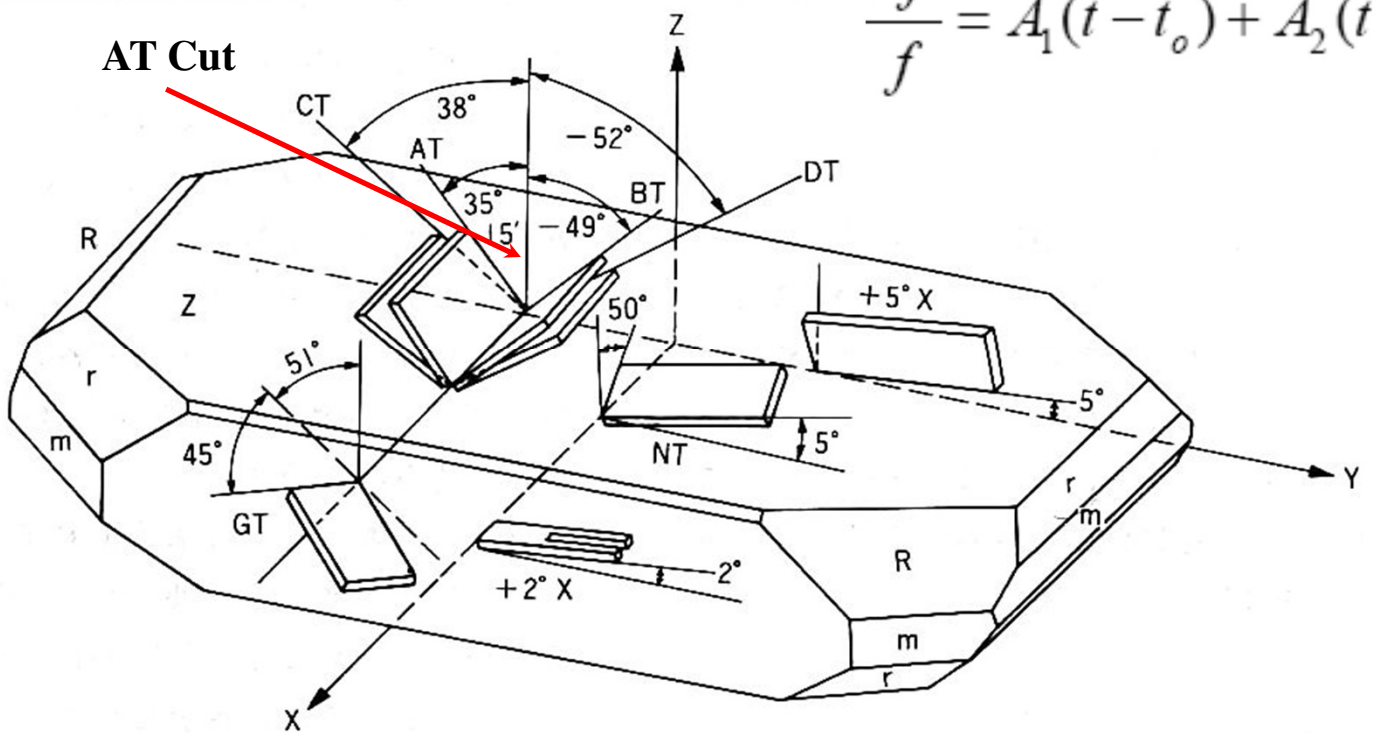

Beechman formulated that the frequency stability over temperature of an AT Cut Crystal can be approximated by a 3rd or higher order polynomial.

Temperature Stability Characteristic of an AT-Cut Crystal

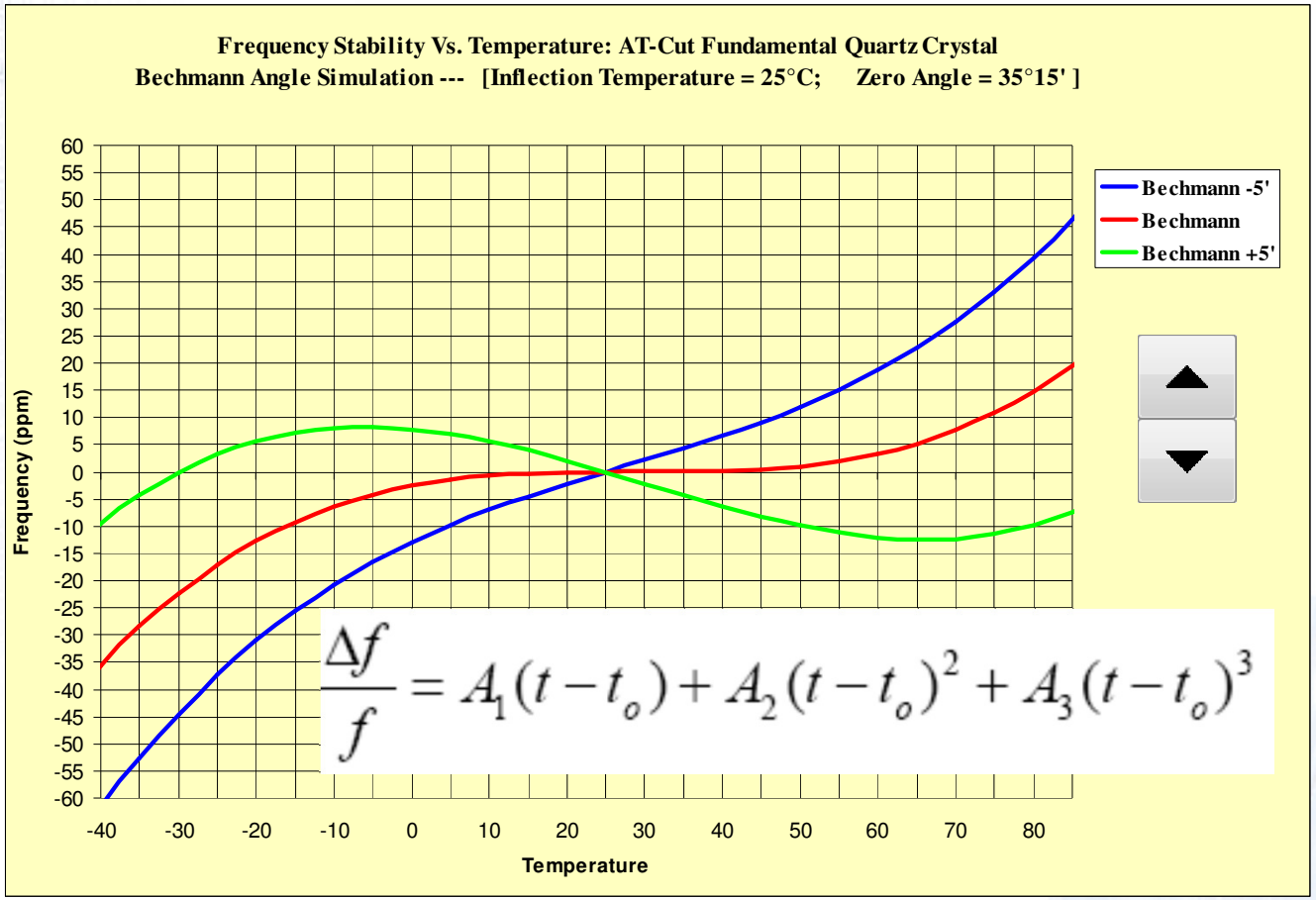

$$\frac{\Delta f}{f} = A_1(t - t_o) + A_2(t - t_o)^2 + A_3(t - t_o)^3$$

The coefficients of this polynomial are directly dependent on the angle of cut. The ZERO Angle where the crystal frequency behavior is the flattest around 25°C is approximately 35° 15' from the z-axis.

Temperature Stability Characteristic of a Tuning Fork Crystal

$\Delta f/f = \text{Coeff} * [(T-25)^2]$

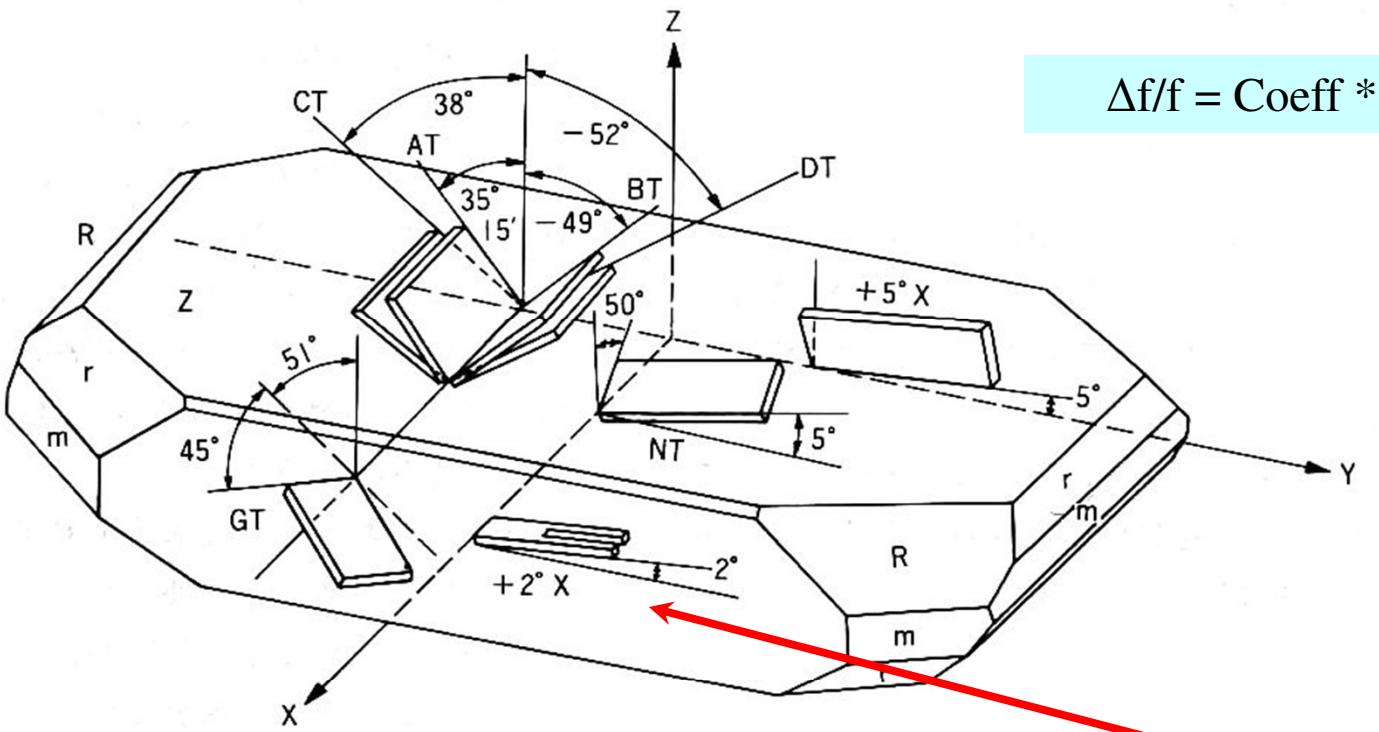

Tuning Fork

The frequency stability over temperature of a Tuning Fork Crystal can be approximated by a Parabolic Function

Temperature Stability Characteristic of a Tuning Fork Crystal

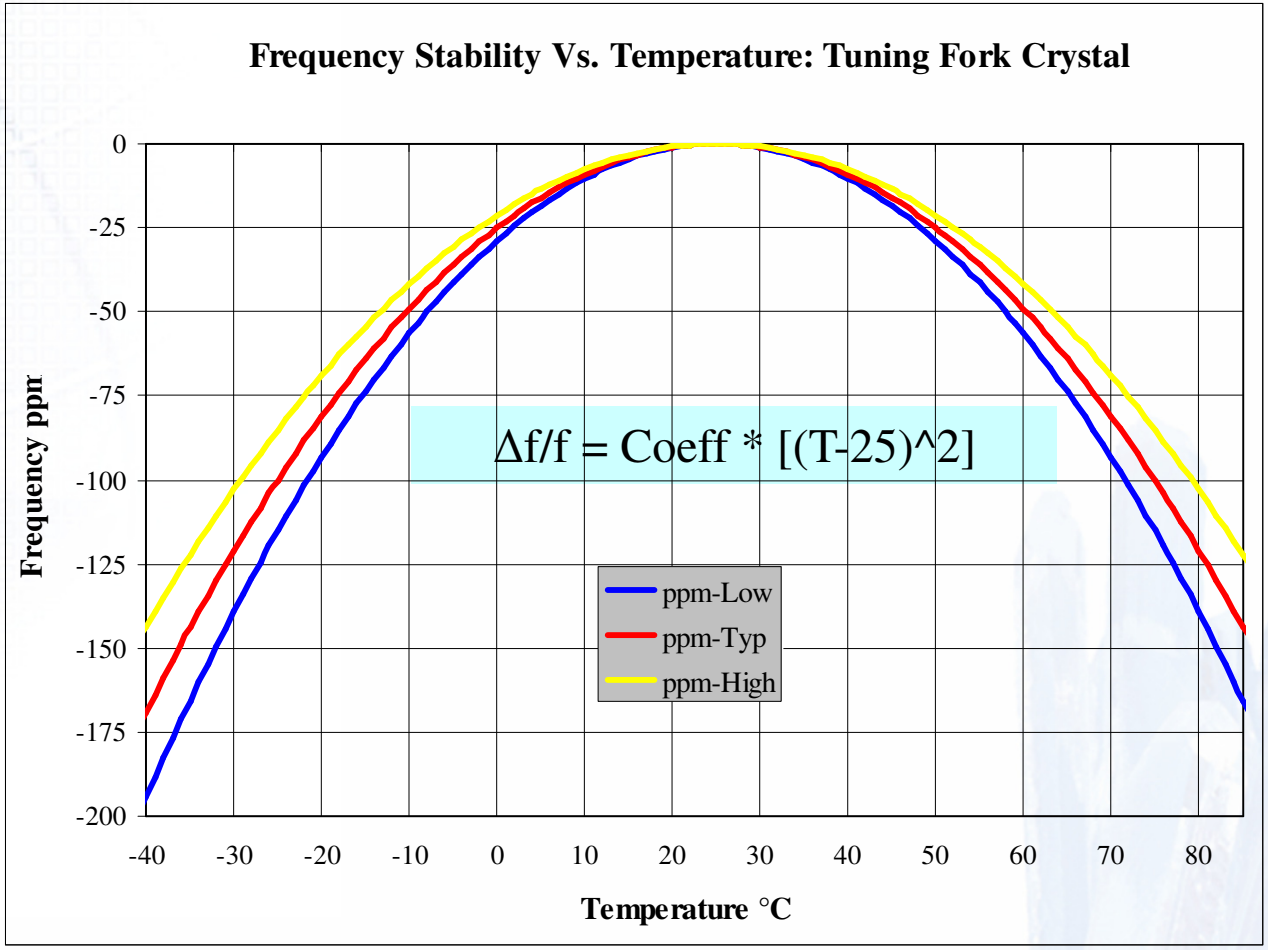

The typical temperature coefficient of the Tuning Fork Crystal is approximately 0.04 ppm / T^2

At-Cut versus a Tuning Fork crystal

AT-cut crystal element

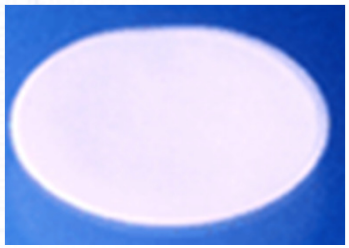

Circle

Rectangular

Tuning Fork crystal element

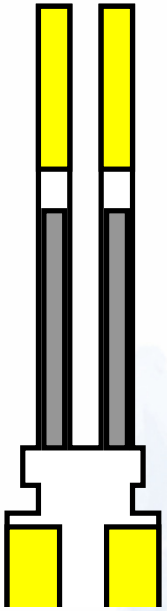

Tuning Fork
(flexure-mode)

Generally speaking, the blank design is final package dependent. AT-Cut vibrates in Thickness Shear Mode whereas; Tuning Fork operates in Flexure Mode

Tuning Fork Production Flow

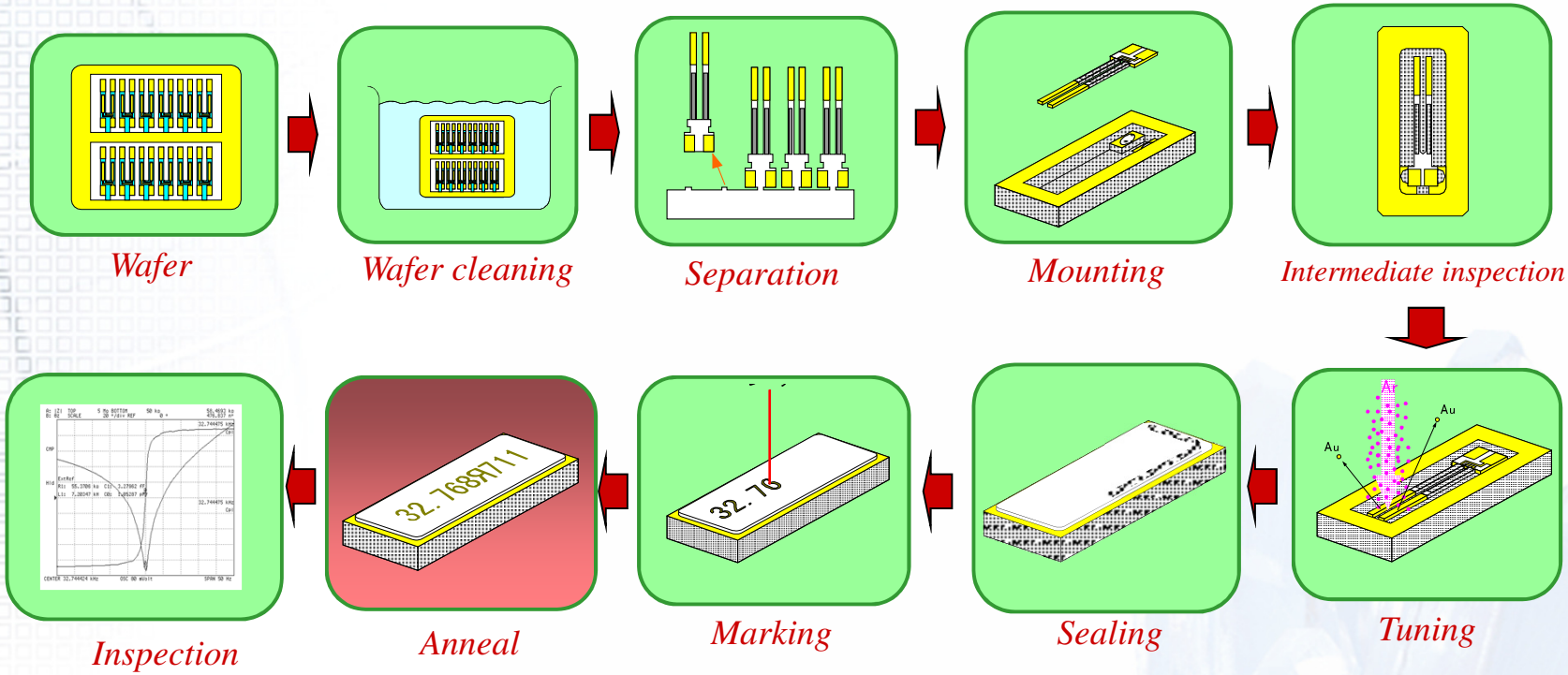

Basic production-flow follows the same sequence as the AT-cut crystal. The primary difference is in tuning the center frequency. There are several ways to achieve that including power shot and laser tuning.

ABRACON's Tuning Fork Timing Products

SMD crystal

Image	Part name
	ABS06 2.0 x 1.2 x 0.6mm ***Industry smallest package!*** Ultra Low Profile , 32.768kHz ***Available July 2009**
	ABS07 3.2 x 1.5 x 0.9mm Low Profile . 32.768kHz
	ABS09 4.10 x 1.5 x 0.9mm Ultra Low Profile . 32.768kHz
	ABS10 4.9 x 1.8 x 1.0mm Ultra Low Profile . 32.768kHz
	ABS13 6.9 x 1.4 x 1.3mm Molded Plastic . 32.768kHz
	ABS25 8.0 x 3.8 x 2.5mm Molded Plastic . 30kHz to 165kHz
	AB206J 8.0 x 2.5mm Cylindrical type Reflowable . 32.768kHz

Thru-hole crystal

Image	Part name
	AB15T 5.1 x 1.5mm Cylindrical type . 32.768kHz
	AB26T 6.2 x 2.1mm Cylindrical type . 32.768kHz
	AB38T 8.3 x 3.2mm Cylindrical type . 32.768kHz

SMD Tuning Fork Crystal Oscillator

Image	Part name
	ASHK 4.0 x 2.5 X 0.9mm ***NEW for 2008: Ultra Low Current 0.8uA ~ 1.5uA*** 1.5V, 1.8V, 2.8V, 3.3V, 5.0V, CMOS, 32.768kHz Low current 2.0uA max@ 5.5V

ABRACON is a one-stop-solution provider for 32.768kHz products. From legacy – cylindrical type packages to industry leading SMT low-Profile solutions, Abracon is well positioned to satisfy most if not all of your real-time clocking requirements

Key design consideration for 32.768kHz Crystal Oscillators

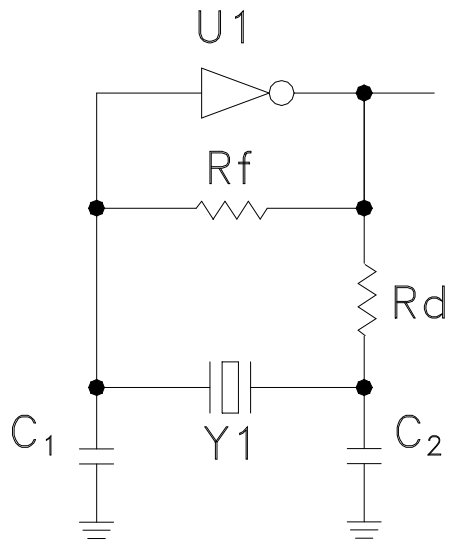

Typical Pierce Oscillator Circuit

U1: Inverter amplifier typically inside the µcontroller IC

Rf : Feed-back resister to set bias for the oscillator loop. Value 10Mohm to 20Mohm

Rd: Damping resister to control drive level Value: 100kohm to 330kohms

C1 and C2: Load capacitors to control center frequency.

These values are to be optimized to meet <1.0uW drive level, while maintaining sufficient oscillation margin.

ABRACON ASHK Tuning Fork Crystal Oscillator

Size :	4.0 x 2.5 x 0.9 mm
Supply Voltage :	Available with 1.5V, 1.8V, 2.5V, 2.8V, 3.3V and 5.0V standard bias
Mature Product:	Millions shipped

Key features:

- Ultra low current consumption with CMOS output (0.8µA maximum)
- Miniature ceramic package (4.0 x 2.5 x 0.9mm)
- Operating Temp -40°C to +85°C
- Start up time less than 1 second
- Tri-state function
- Pb-free reflow capable

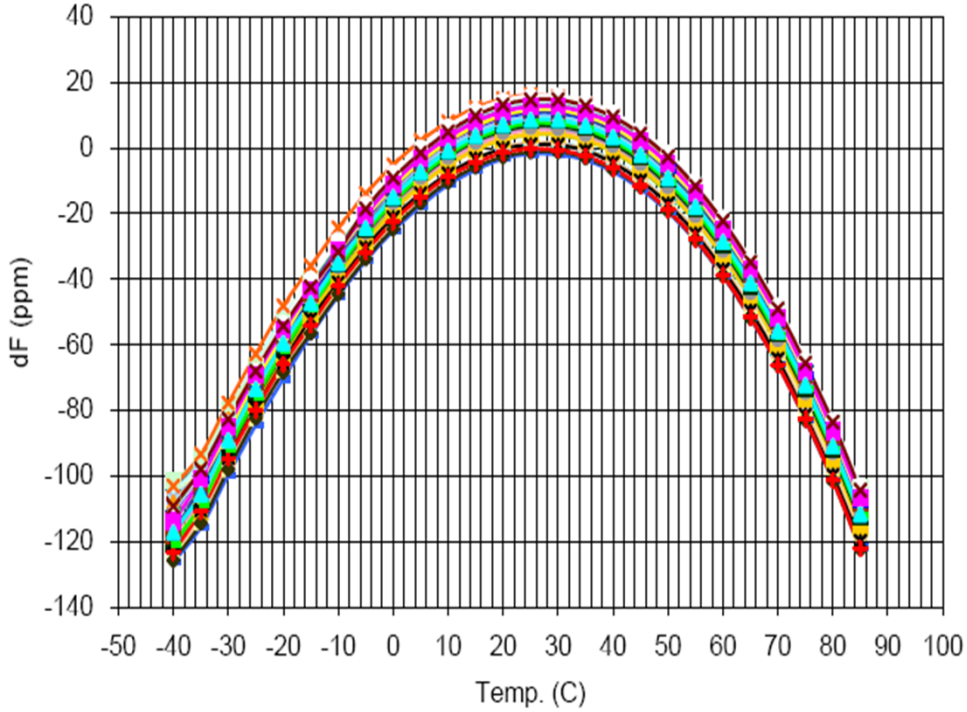

ABRACON's ASHK oscillator in 4.0 x 2.5 SMD package utilizes a Tuning Fork crystal. It features ultra low current consumption with a CMOS Output and the equivalent temperature behavior of a Tuning Fork crystal.

Summary

- Abracon offers a broad breadth of crystal & oscillator products for real-time clocking requirements
- Abracon's clock crystals in cylindrical packaging are optimal for cost sensitive solutions
- High density board designs requiring ultra miniature devices can leverage Abracon's SMT clock crystals and oscillator products, as small as ***2.0 x 1.2 x 0.6 mm***
- Further packaging miniaturization is planned
- For power sensitive applications, ASHK clock oscillator is an optimal choice drawing less than 0.8µA of total current

Thank You!

ABRACON Corporation
30332 Esperanza
Rancho Santa Margarita, California 92688
Ph 949.546.8000 Fx 949.546.8001
www.abracon.com